BASE: 6 SURFACE

SURFACE-1

SURFACE-3

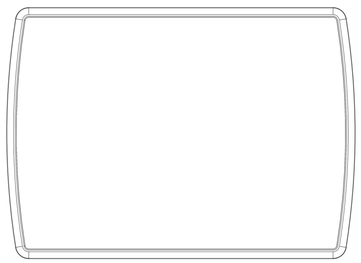

SURFACE-5

SURFACE-4

SURFACE-2

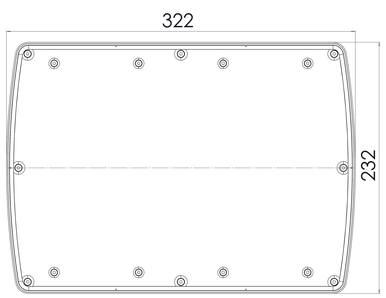

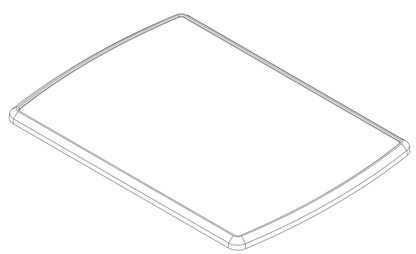

SURFACE-6 (INSIDE)

COVER: 6 SURFACE

SURFACE-7

SURFACE-9

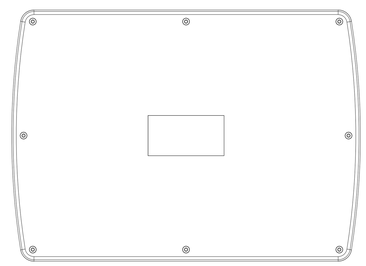

SURFACE-11

SURFACE-10

SURFACE-8

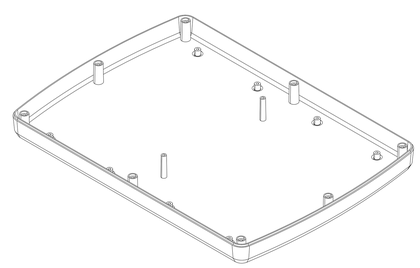

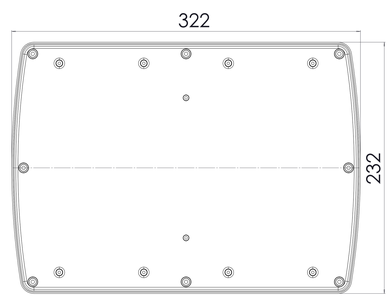

SURFACE-12 (INSIDE)

HH-2110 IF MACHINED TOGETHER

SURFACE-13

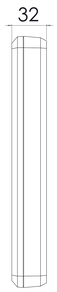

SURFACE-15

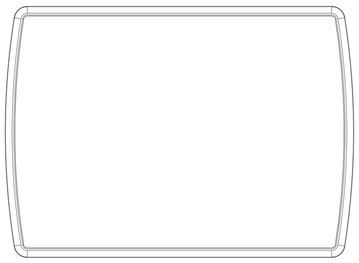

SURFACE-17

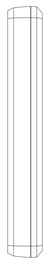

SURFACE-16

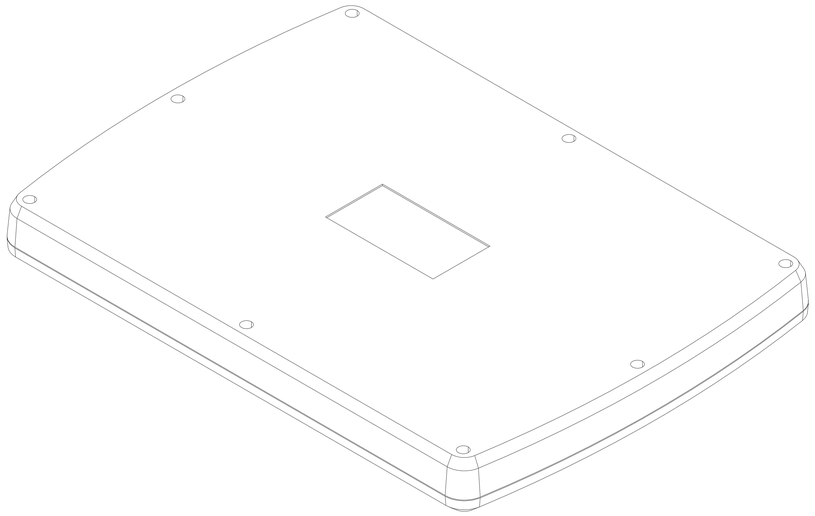

SURFACE-14

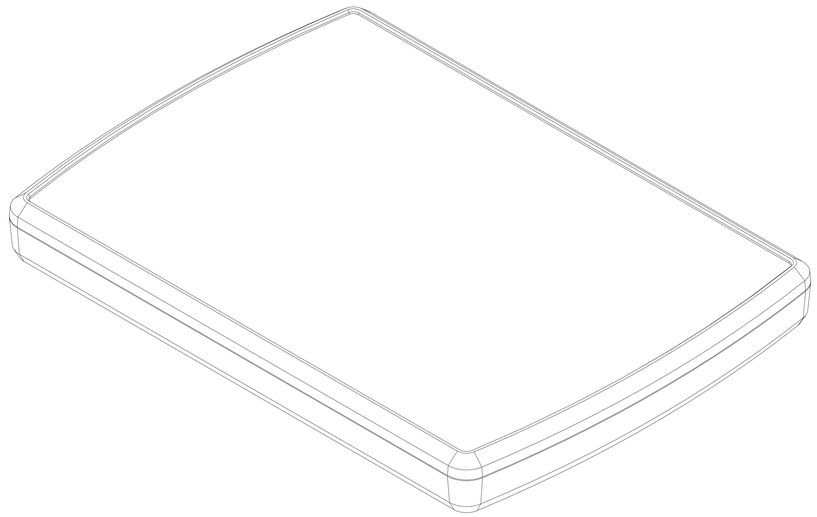

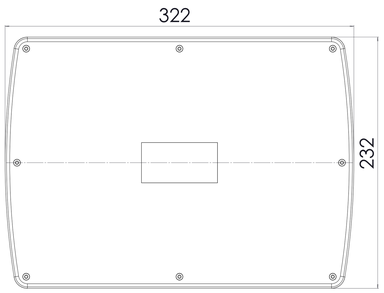

SURFACE-18