BASE: 6 SURFACE

SURFACE-1

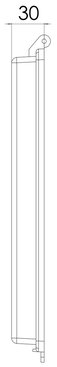

SURFACE-3

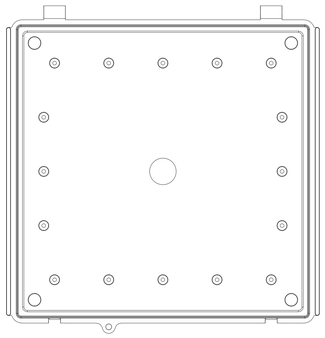

SURFACE-5

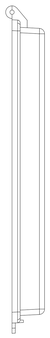

SURFACE-4

SURFACE-2

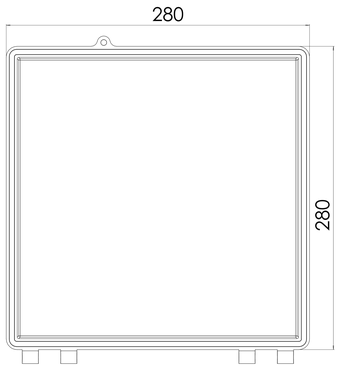

SURFACE-6 (INSIDE)

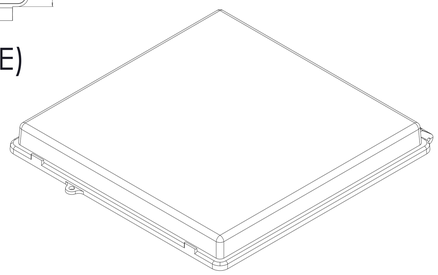

COVER: 6 SURFACE

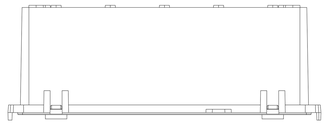

SURFACE-7

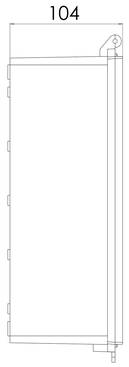

SURFACE-9

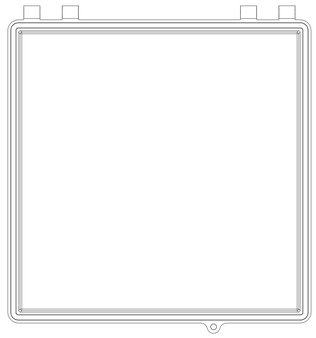

SURFACE-11

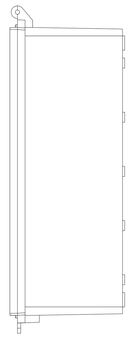

SURFACE-10

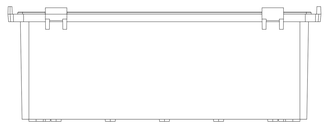

SURFACE-8

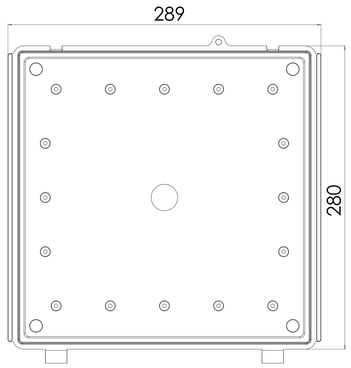

SURFACE-12 (INSIDE)

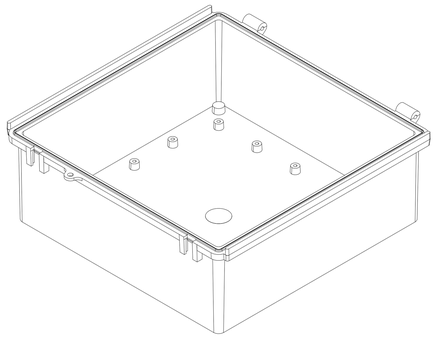

EC-2828 IF MACHINED TOGETHER

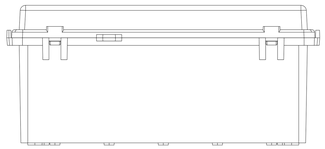

SURFACE-13

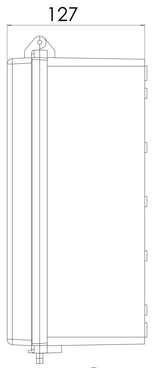

SURFACE-15

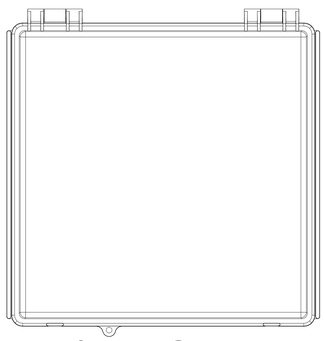

SURFACE-17

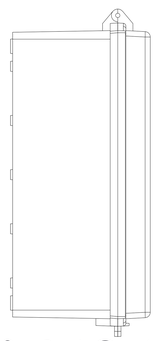

SURFACE-16

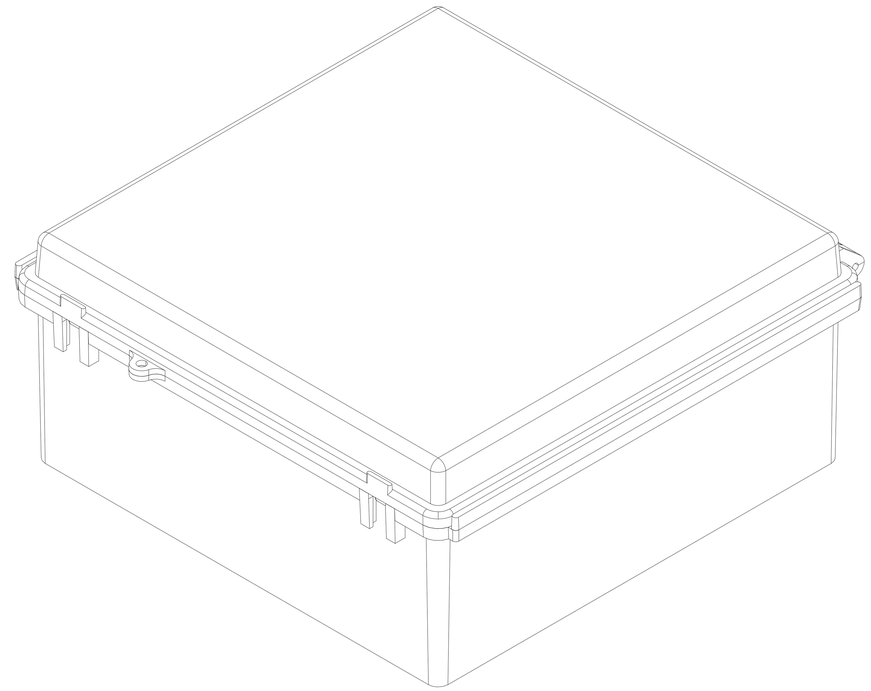

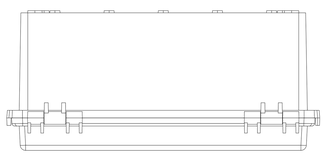

SURFACE-14

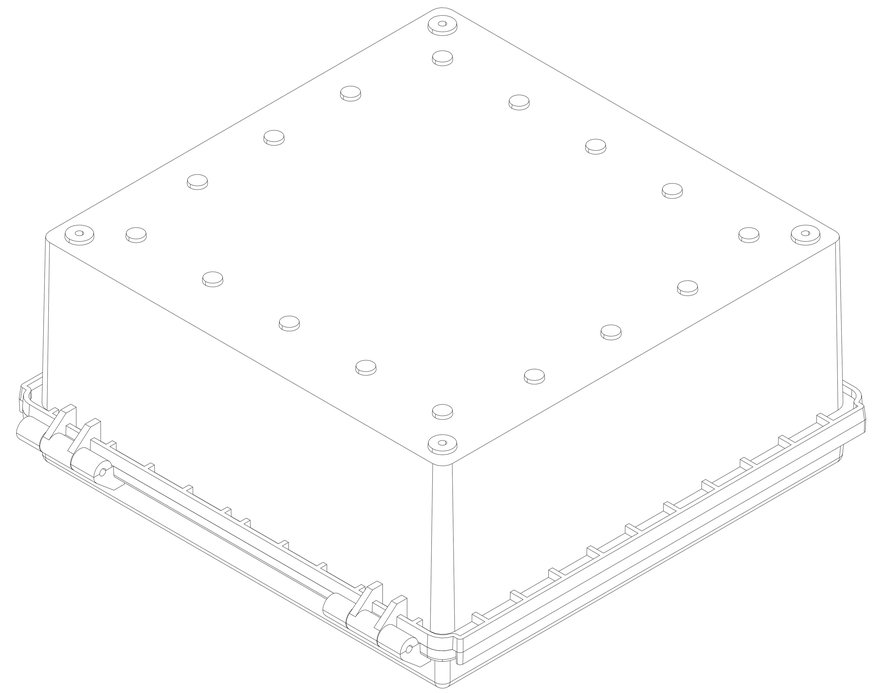

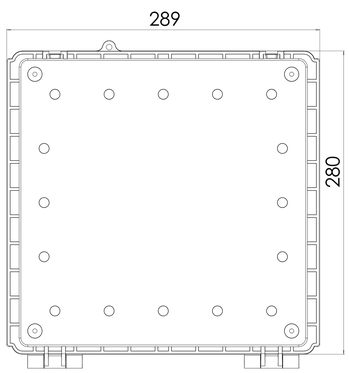

SURFACE-18