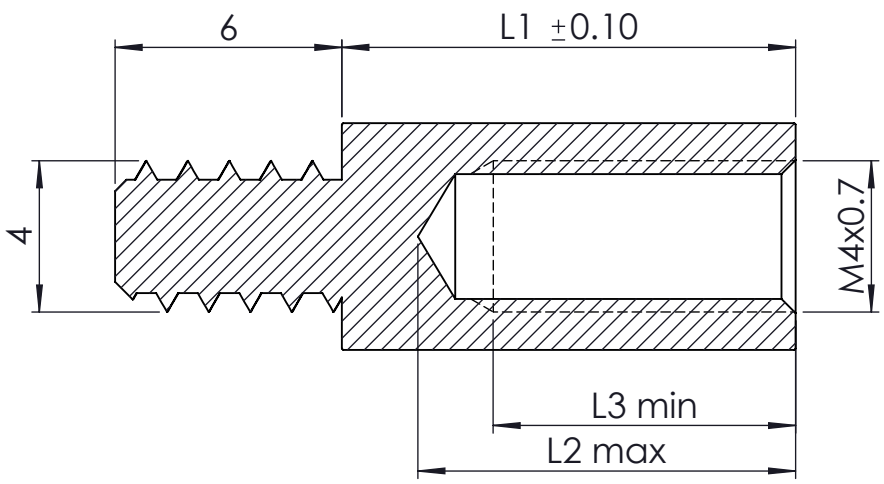

KESIT A-A

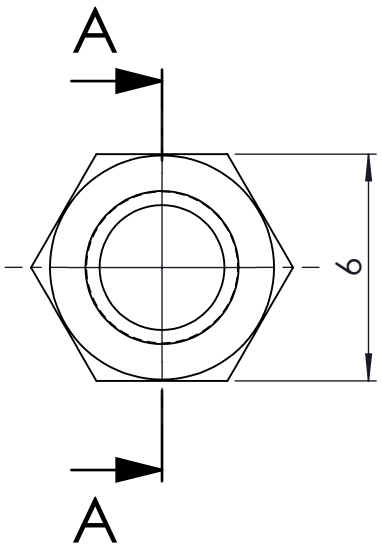

Kodu	L1 (mm)	L2 (mm)	L3 (mm)	Kodu	L1 (mm)	L2 (mm)	L3 (mm)
YP-4406	6	5,5	5	YP-4416	16	11	8
YP-4407	7	6,5	6	YP-4417	17	11	8
YP-4408	8	7,5	7	YP-4418	18	11	8
YP-4409	9	8,5	7,5	YP-4419	19	11	8
YP-4410	10	9,5	8	YP-4420	20	11	8
YP-4411	11	10	8	YP-4421	21	11	8
YP-4412	12	11	8	YP-4422	22	11	8
YP-4413	13	11	8	YP-4423	23	11	8
YP-4414	14	11	8	YP-4424	24	11	8
YP-4415	15	11	8	YP-4425	25	11	8

	NAME	DATE
DRAWN	Dursun Daşdemir	08.01.20
CHECKED	Ali Altınışık	08.01.20

ALTINKAYA
ENCLOSURES FOR ELECTRONICS
www.altinkaya.com.tr

PROPRIETARY AND CONFIDENTIAL
THE INFORMATION CONTAINED IN THIS DRAWING IS THE SOLE PROPERTY OF ALTINKAYA ENCLOSURES. ANY REPRODUCTION IN PART OR AS A WHOLE WITHOUT THE WRITTEN PERMISSION OF ALTINKAYA ENCLOSURES IS PROHIBITED.

ARTICLE NO:

REVISION:

COMMENTS:
This drawing is subject to technical modification without prior notice. Typographical and other errors do not justify any claims for damages. All dimensions should be verified using an actual produced part

DİKKAT: BU RESİM VE ÜRÜN ÖNCEDEN HABER VERİLMEKSİZİN DEĞİŞTİREBİLİR. RESİM ÇİZİLİRKEN HATASIZ OLMASINA ÇALIŞILMASINA RAĞMEN RESİMDE HATALAR BULUNABİLİR. RESİMDEKİ HATALARDAN DOLAYI OLUŞABİLECEK ZARARLAR İÇİN ALTINKAYA HİÇ BİR SORUMLULUK KABUL ETMEZ. BÜTÜN ÖLÇÜLER KULLANILMADAN ÖNCE ÜRETİLMİŞ GERÇEK NUMUNEDEN KONTROL EDİLMELİDİR.

MATERIAL:

TITLE:
4 x 6 mm Plastik Dişli Yülseltme Parçası

DWG NO. YP-4400

A4

WEIGHT:

SCALE:5:1

SHEET 1 OF 1