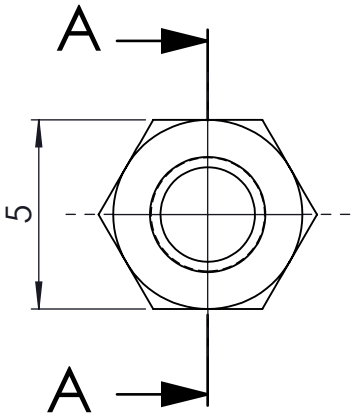

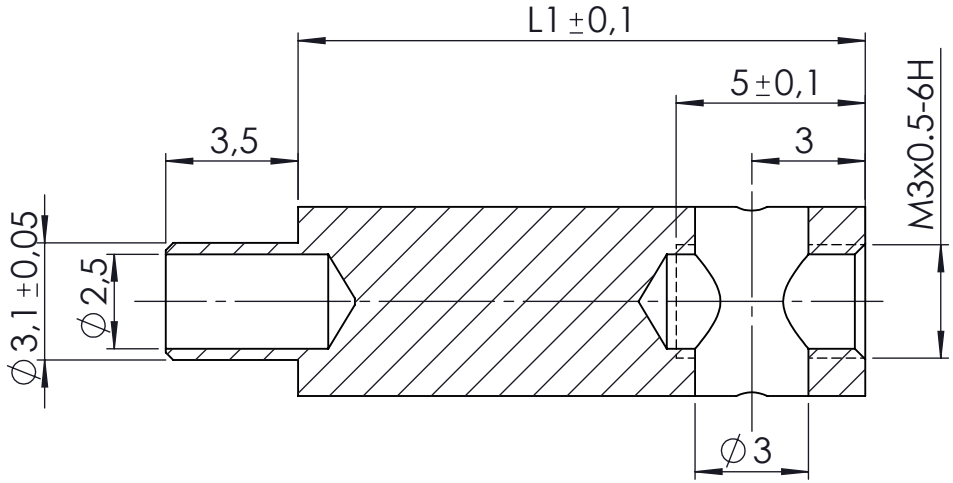

KESIT A-A

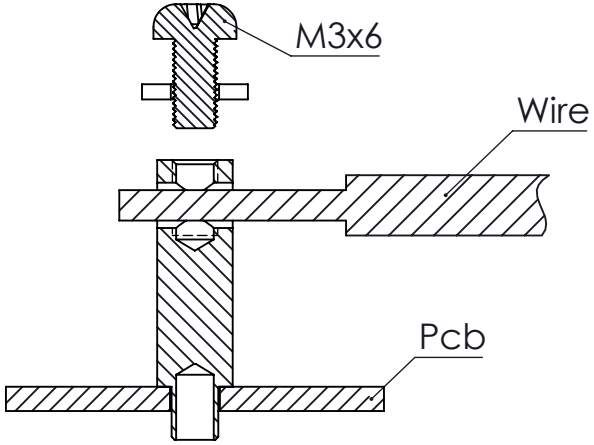

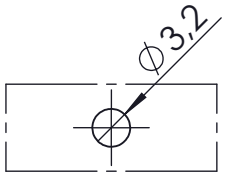

Layout Suggestion

Kodu	L1 (mm)
YP-040-8	8
YP-040-10	10

	NAME	DATE
DRAWN	Dursun Daşdemir	20.09.22
CHECKED	Ali Altınışık	20.09.22

ALTINKAYA
ENCLOSURES FOR ELECTRONICS
www.altinkaya.com.tr

PROPRIETARY AND CONFIDENTIAL

THE INFORMATION CONTAINED IN THIS DRAWING IS THE SOLE PROPERTY OF ALTINKAYA ENCLOSURES. ANY REPRODUCTION IN PART OR AS A WHOLE WITHOUT THE WRITTEN PERMISSION OF ALTINKAYA ENCLOSURES IS PROHIBITED.

ARTICLE NO:

REVISION:

COMMENTS:

This drawing is subject to technical modification without prior notice. Typographical and other errors do not justify any claims for damages. All dimensions should be verified using an actual produced part.

DİKKAT: BU RESİM VE ÜRÜN ÖNCEDEN HABER VERİLMEKSİZİN DEĞİŞTİREBİLİR. RESİM ÇİZİLİRKEN HATASIZ OLMASINA ÇALIŞILMASINA RAĞMEN RESİMDE HATALAR BULUNABİLİR. RESİMDEKİ HATALARDAN DOLAYI OLUŞABİLECEK ZARARLAR İÇİN ALTINKAYA HİÇ BİR SORUMLULUK KABUL ETMEZ. BÜTÜN ÖLÇÜLER KULLANILMADAN ÖNCE ÜRETİLMİŞ GERÇEK NUMUNEDEN KONTROL EDİLMELİDİR.

MATERIAL: Brass-Nickel Plated

TITLE:

Solderable Grounding Terminal

DWG NO. YP-040-xx

A4

WEIGHT:

SCALE:5:1

SHEET 1 OF 1